Steinbach
we are pool

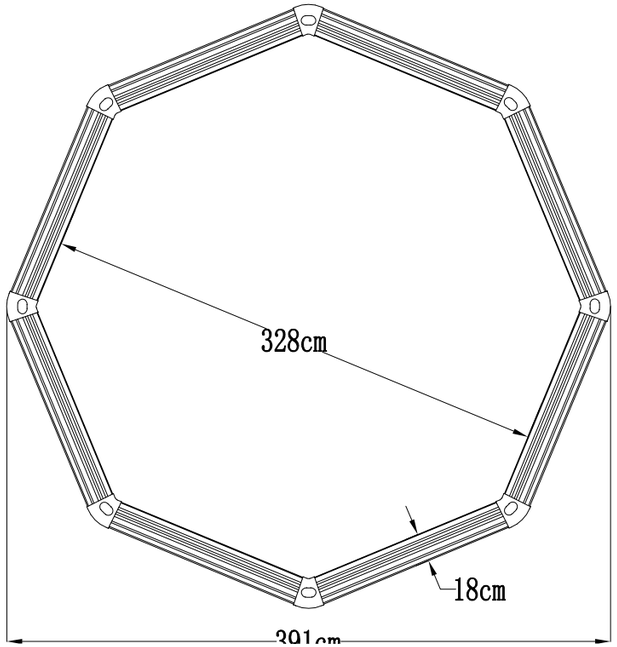

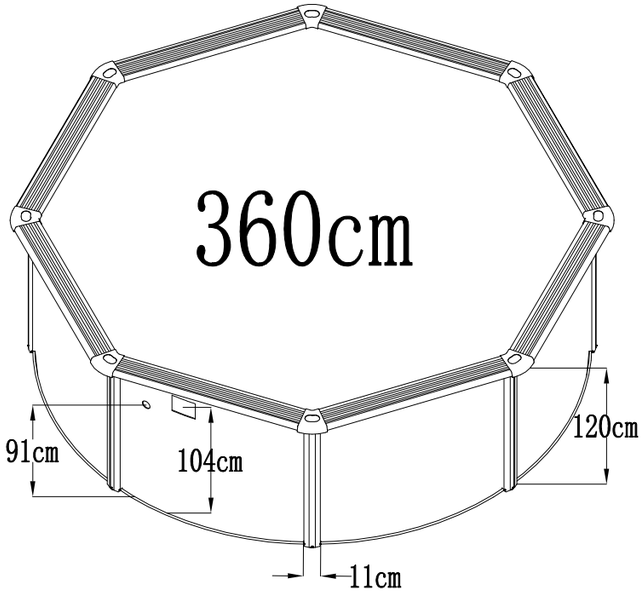
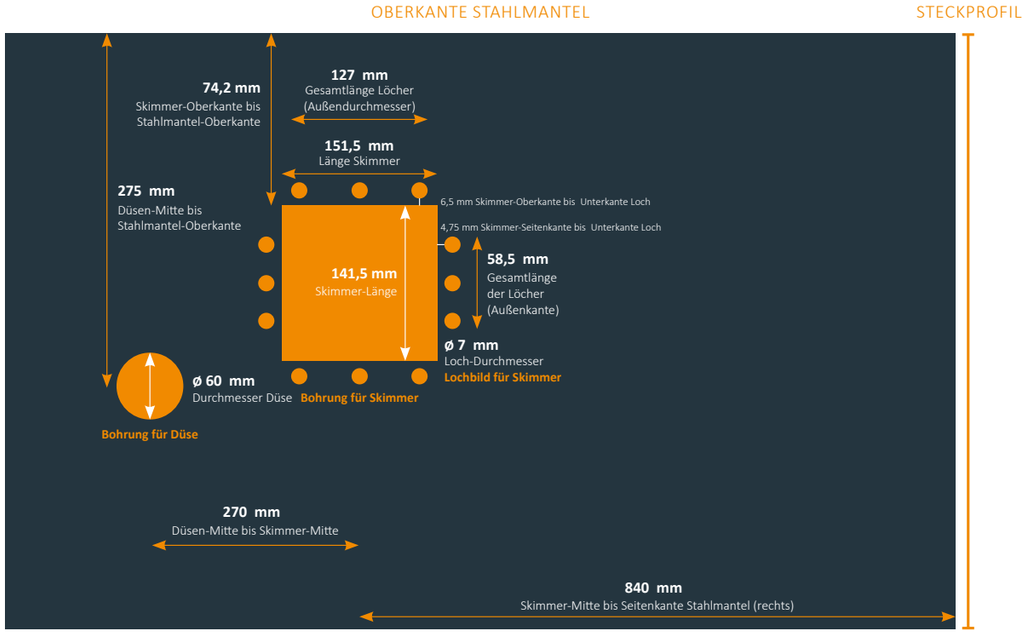
Stahlmantel Stanzung