Stahlwandpool Set Nuovo de Luxe oval
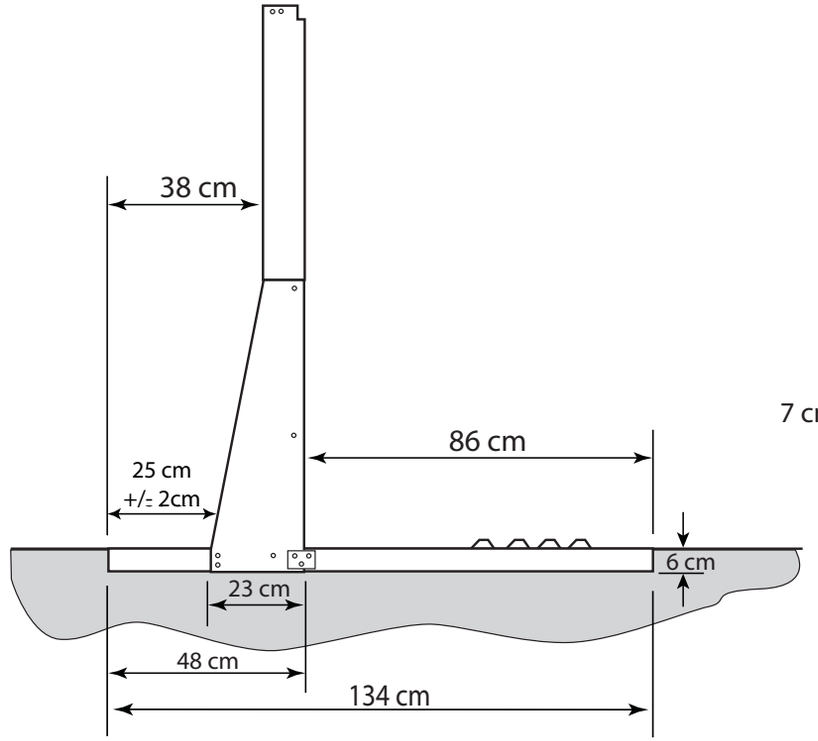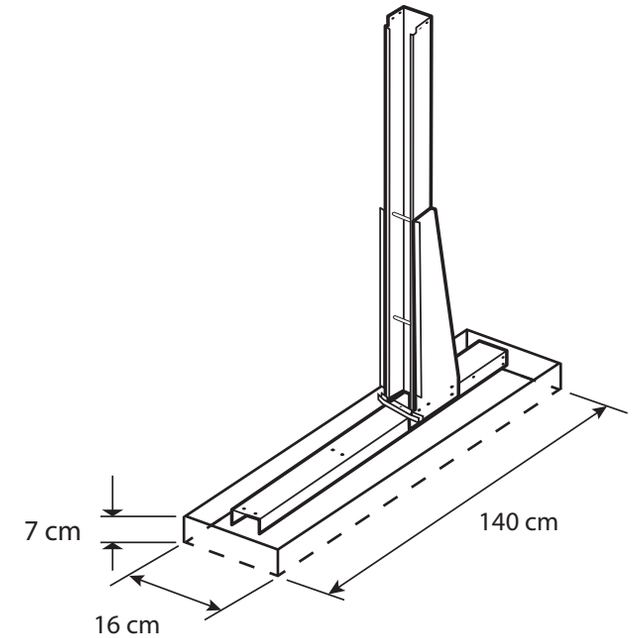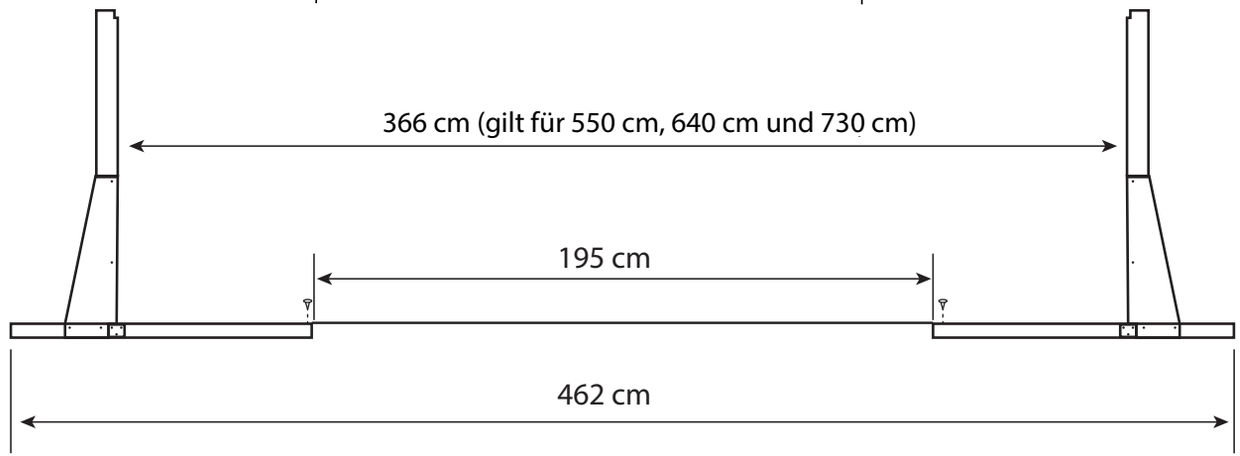
Steinbach
we are pool