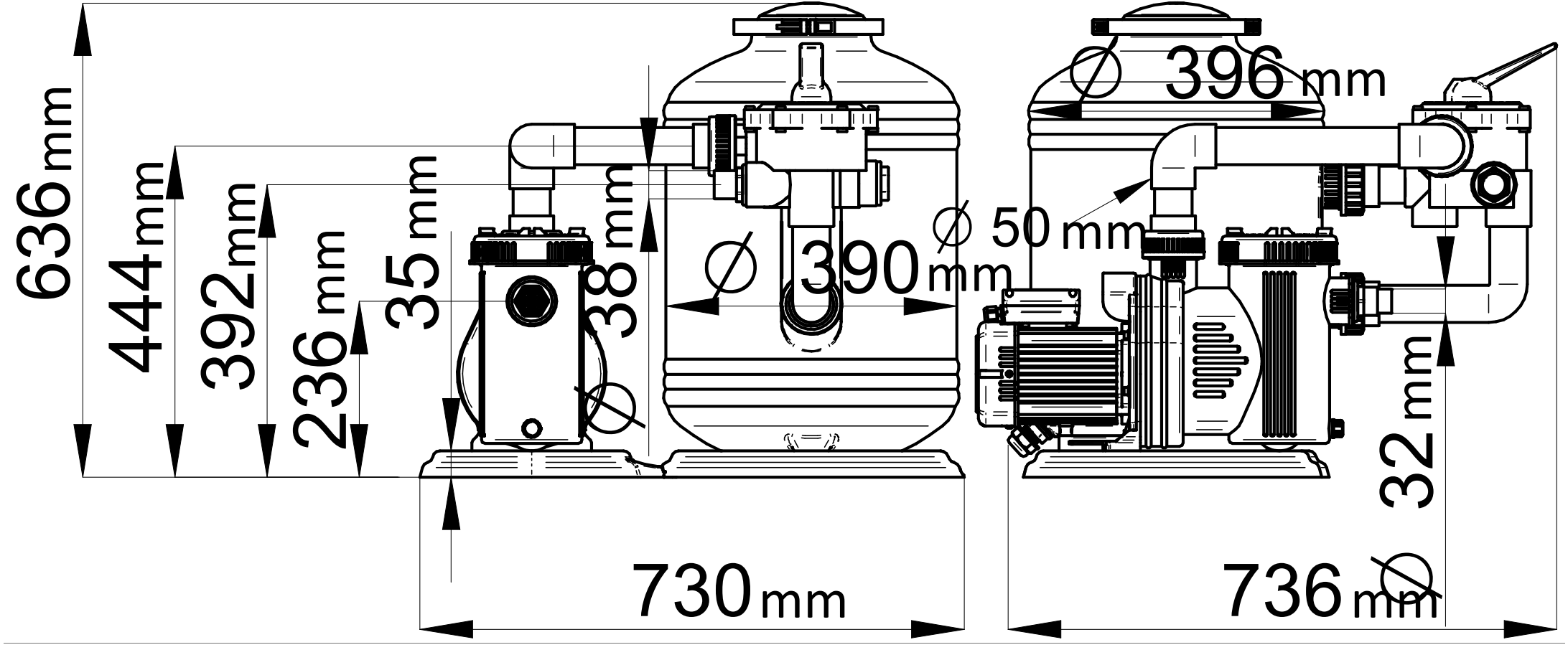Steinbach
we are pool